SITE FEATURES
Hill Slide Double 3' w/ Retaining Wall

NAT-000110

No playground is truly complete without this quintessential playground piece. Available in both single and double slide options, Active Playground's hill slide is the perfect addition to any space. Custom-built for each site to meet CSA standards, the hill slide comes with your choice of standard platform crawler, log steps, or even a hill climber for extra adventure. With a roof option available, this statement piece is sure to be a favorite.

MADE IN · FABRIQUÉ AU CANADA

Motor Skills
- Upper Body Strength
- Lower Body Strength
- Core Strength
- Balance
- Coordination

Cognitive
- Exploration
- Risk

Social/Emotional
- Parallel, Joint or Cooperative Play
- Turn-Taking

Communication
- Role Playing

Sensory Processing
- Tactile
- Visual
- Vestibular

- **Hill Slides are custom built for each site, this sizing is only a rough estimate. Please call one of our sales representatives today for your custom design.**

124 Kendall Street, Point Edward, ON 800-463-2361 info@apeplayground.com www.apeplayground.com

Play made easy!

SITE FEATURES
Hill Slide Double 3’ w/ Retaining Wall

NAT-000110

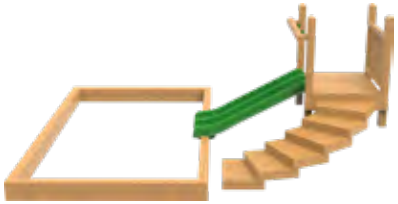

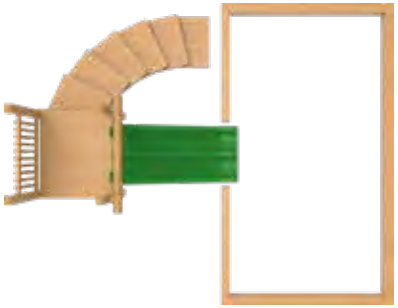

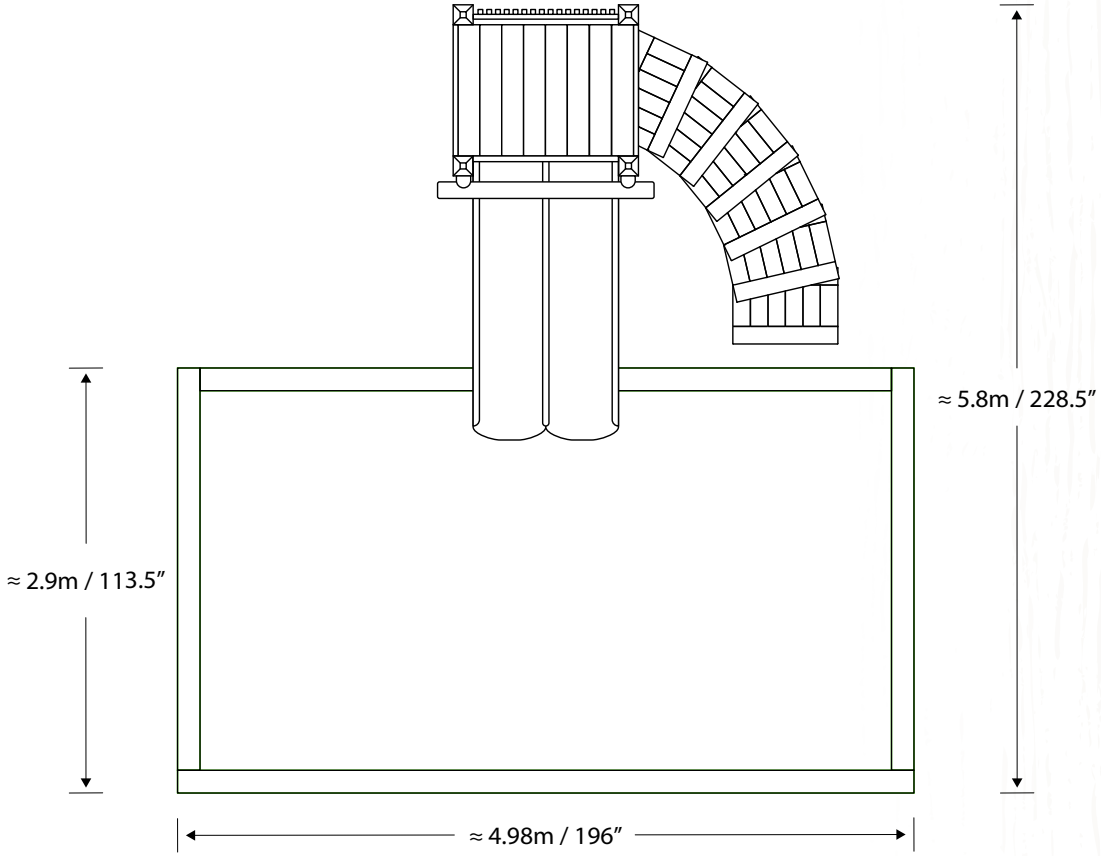

Target Age
18 months to 5 years

Use Area
- Varies

Installation Type
- Difficult

Estimated Weight
- N/A

Safety Surfacing
- Required

Dimensions
- Built to Site
- ≈ 4.98m x 5.8m
- ≈ 196” x 228.5”

Materials
- Pressure Treated Lumber
- Modified Lumber
- Plastic Slide

Please contact APE for a site plan for your playground to ensure CSA compliance and spacing requirements.

Active Playground Equipment reserves the right to redesign, change or discontinue products without written notice. Products in our printed literature and detailed in our quotations may differ from what is available at the time an order is placed. Please check with your Active Playground representative to confirm that the product you will receive is what you are expecting.